ENGINEERING REPAIR REPORT

SHIH WEI-CHIEH – “I AM VERY HAPPY I HOPE YOU ARE TOO” HEADDRESS ARTEFACTS

PREPARED BY ALBERT ONG

1. INTRODUCTION

1.1. JOB OVERVIEW

Tinkery was contacted by client (UTS ART Gallery) to repair of an e-textile artwork titled "I Am Happy I Hope You Are Happy Too". This artwork comprises of two individual headdresses with LEDs, designed by Shih Wei-Chieh.

Wei-Chieh indicated that the artefacts were not working, despite having attempted to replace components and boards on the artefacts. These were shipped to UTS ART non-functioning.

In this report, the headdresses are referred to as "artefacts". Albert Ong was assigned to attempt repairs on the artefacts.

1.2. PERSONNEL DETAILS

This section outlines the details of the personnel undertaking and performing requested work:

Albert Ta-Yuen Ong
M: +61 452 006 815
E: albert.ong@tinkery.com.au
Li: linkedin.com/in/ongalb/

- B.E./B.Biotechnology Hons. (UTS)
- 8 years of electronics experience in smart products, wearable electronics, and robotics.
- Work history on a number of electronics/mechatronics based art projects, including Ian Burns, Sydney Council Green Square Tender, and Vivid Sydney 2016.

2. METHOD

The task was divided into a three-stage process:

2.1. INITIAL INSPECTION

An initial inspection was conducted to identify root causes of failure. This comprised of:

1. Review of desired circuit behaviour
2. Circuit analysis
    a. Circuit layout mapping and review,
    b. Circuit inspection (identifying any visible signs of failure),
    c. Continuity testing.
3. Observation of circuit behaviour when powered
    a. Developing means of powering the circuit
    b. Observations and testing of current electrical behaviour

2.2. MODIFICATION AND TESTING

Based on initial inspection and diagnosis, a number of modifications were made. Modifications were made to restore and ensure performance whilst ensuring as little modification to the aesthetics as possible.

The main repairs performed on the artefacts were:

1. Crimping of LED wing crimps (legs) – to restore and maintain electrical connection,
2. Repair of broken thread wires to restore power reticulation and connection to rows of LEDs,
3. Addition of decoupling capacitors – to ensure communication fidelity (and consequently performance) of ICs,
4. Identification of problem components that cannot be replaced in the project timeframe:
    a. ATTiny85 Microcontroller (firmware or device), and
    b. Film circuit board

2.3. RECOMMENDATIONS

The final section of this report outlines recommendations for restoring full performance of the artefact.

3. INITIAL INSPECTION

3.1. REVIEW OF DESIRED CIRCUIT BEHAVIOUR

Based on source materials provided by UTS ART and online materials pertaining to the artwork, we were able to interpret desired functionality of the headdress.

3.1.1. HORNED HEADDRESS ARTEFACT

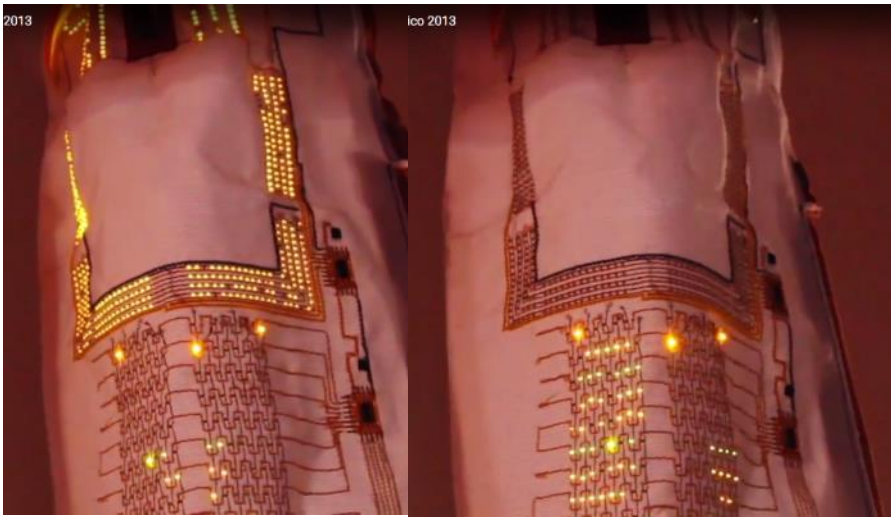

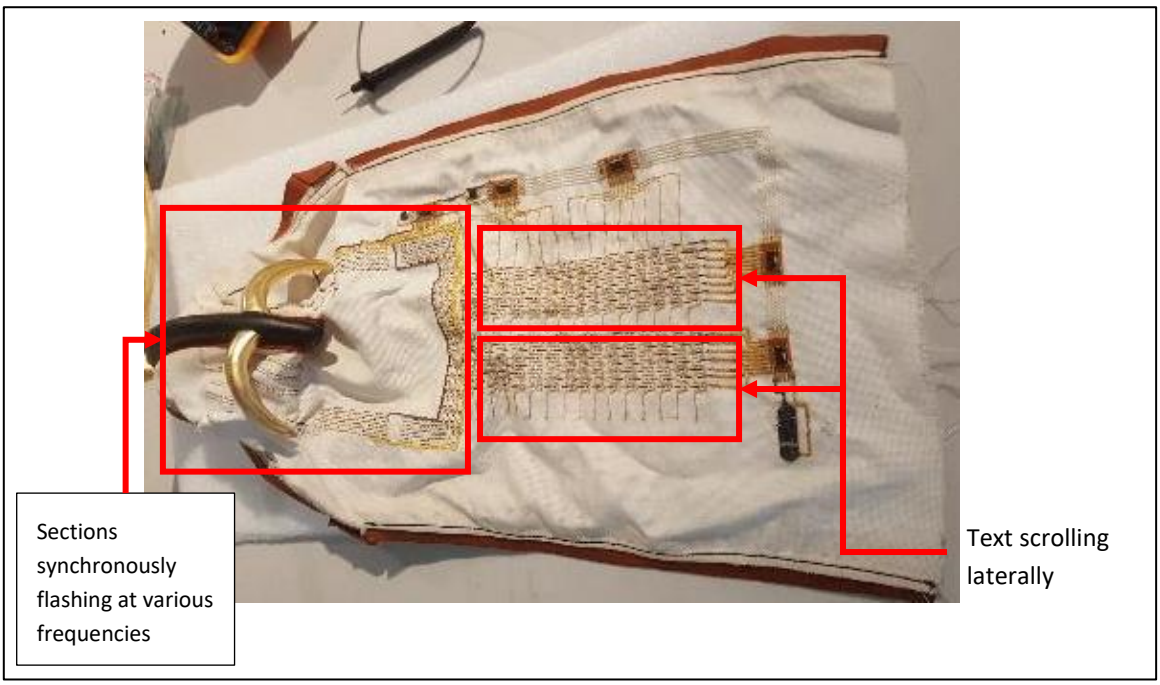

3.1.2. WINGED HEADDRESS ARTEFACT

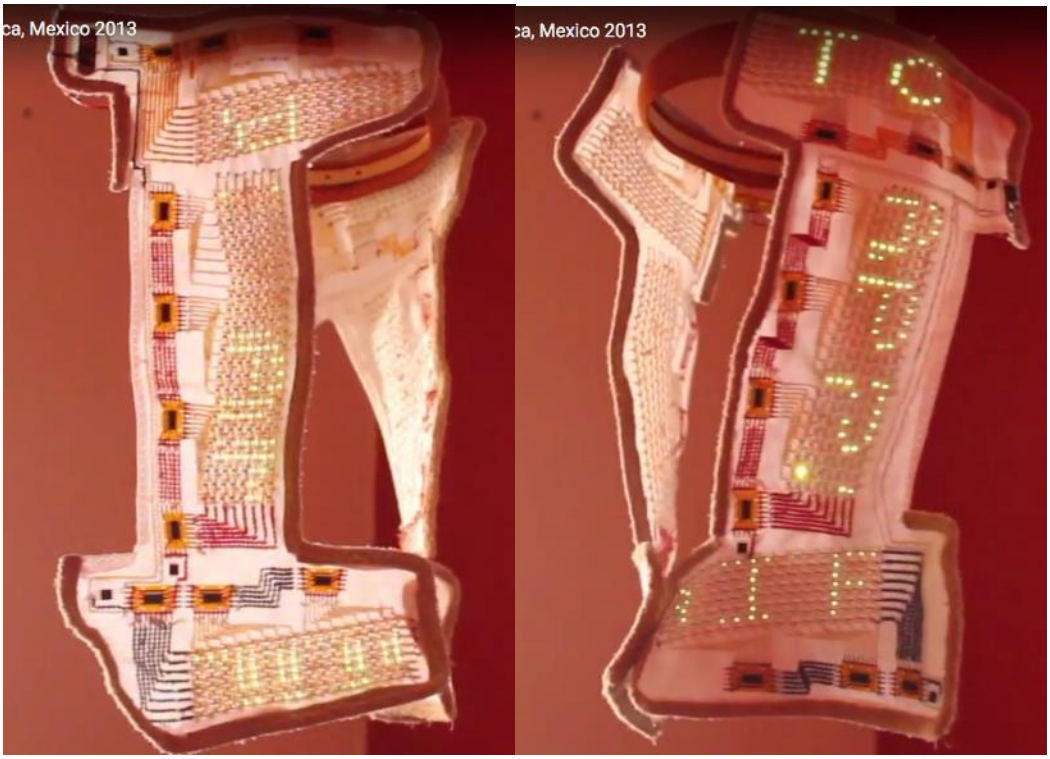

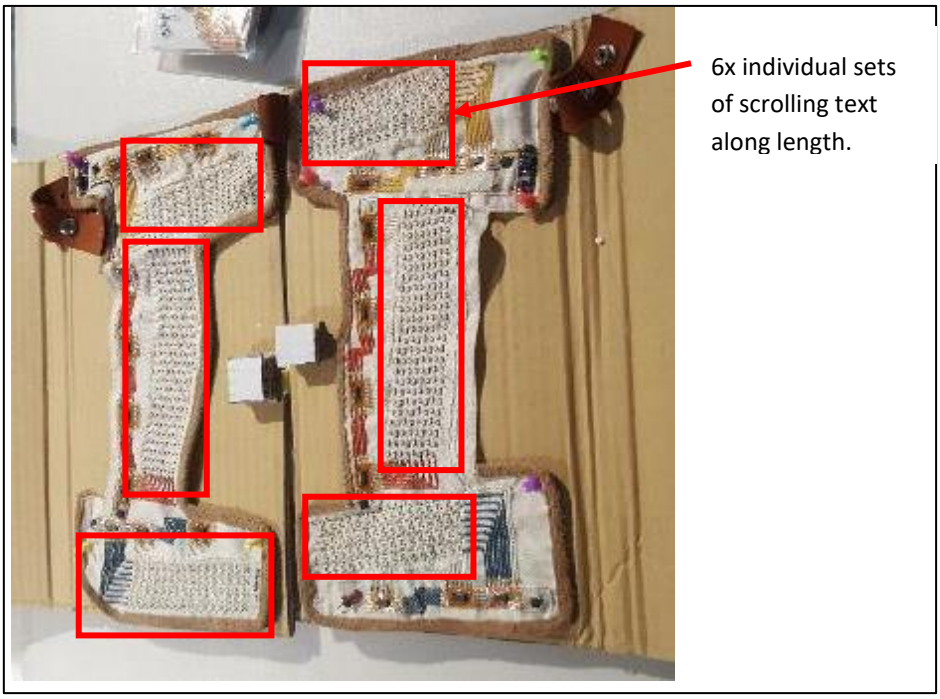

3.2. CIRCUIT ANALYSIS

Upon receiving the artefacts, initial steps were to review the circuit layout.

3.2.1. CIRCUIT LAYOUT MAPPING

Initial circuit analysis yielded the following general circuit layout:

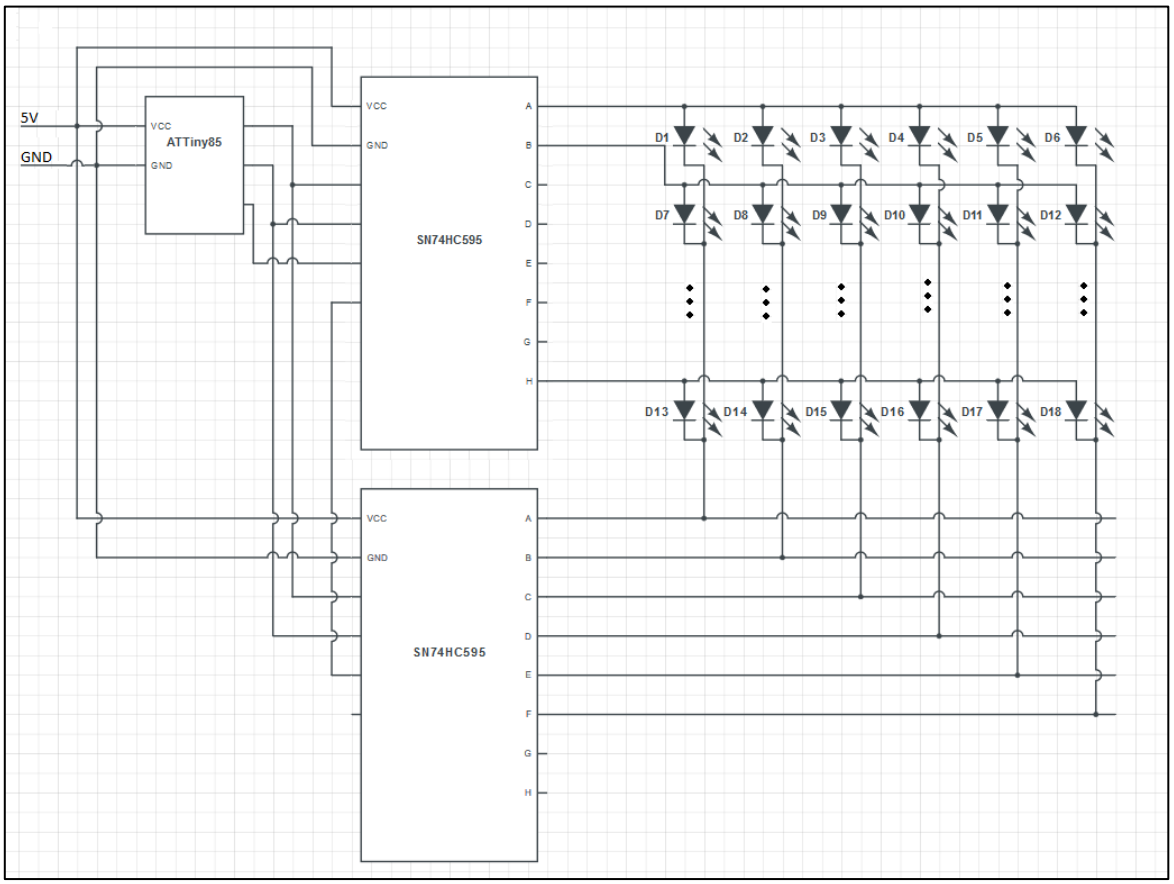

Figure 1 - High level schematic demonstrating bus lines and general LED Matrix Circuit.

Pinout of Primary Integrated Circuits (IC) used:

- ATMEGA **ATTiny85** – AVR-Based Microcontroller, 8-pin SOIC Package.

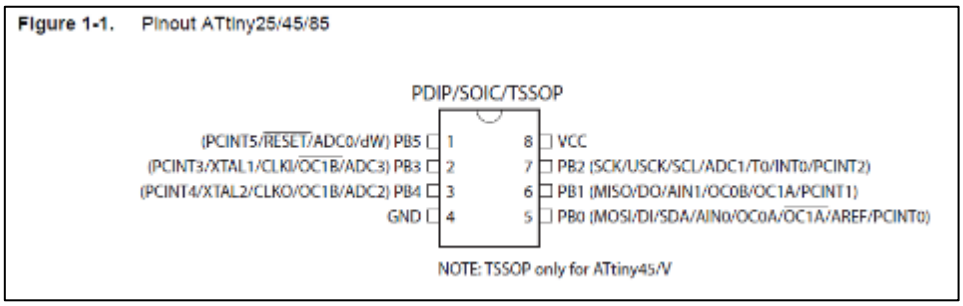

- Texas Instruments (TI) **SN74HC595** – Shift Register, 16-pin SOIC Package.

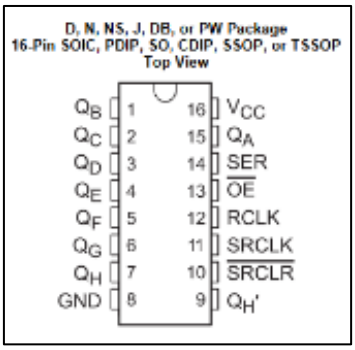

3.2.2. INITIAL FINDINGS

The circuit review uncovered that recommended digital circuit protection measures were not present on any circuits on any of the artefacts. The particular circuit protection measures absent were:

- Decoupling capacitors on digital power rails (for noise suppression and power smoothing on ICs), and
- Current limiting resistors on LED circuits.

Based on this, we expected the artefacts to exhibit undesired behaviours. However, we proceeded to inspecting the circuit prior to powering the circuit (to prevent risk of circuit damage from short circuit).

3.2.3. CIRCUIT INSPECTION

3.2.3.1. COMPONENT AND JOINT INTEGRITY

Initial inspection of the circuit identified that typical digital circuit protection measures were not present on either artefact, namely **decoupling capacitors** and **current limiting resistors** as described in Section 3.2.1.. The absence of circuit protection measures risks damage to circuit components.

Upon visible inspection, we identified no visible damage to ICs (based on physical damage, burns or corrosion), and no cold solder joints were observed. However, jumper wires were observed (see Figure 2) to be soldered between components, film circuit boards and printed circuit boards, suggesting previous repairs/modifications were performed to address problems with electrical discontinuity (broken wires in the circuit) by acting as redundant/replacement connections.

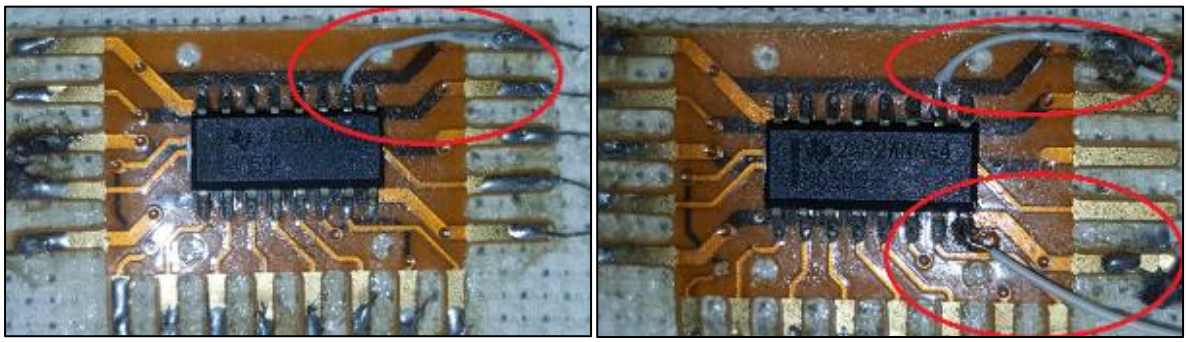

Figure 2 – Two different shift Register ICs mounted on film circuit boards. Note jumper wires (white wires circled in red) not originally part of the existing film circuit boards are soldered.

Further inspection of the LEDs uncovered a number of LEDs with damaged or missing legs (see Figure 3). The missing leg(s) render the LED non-functional and will require replacement of the LED.

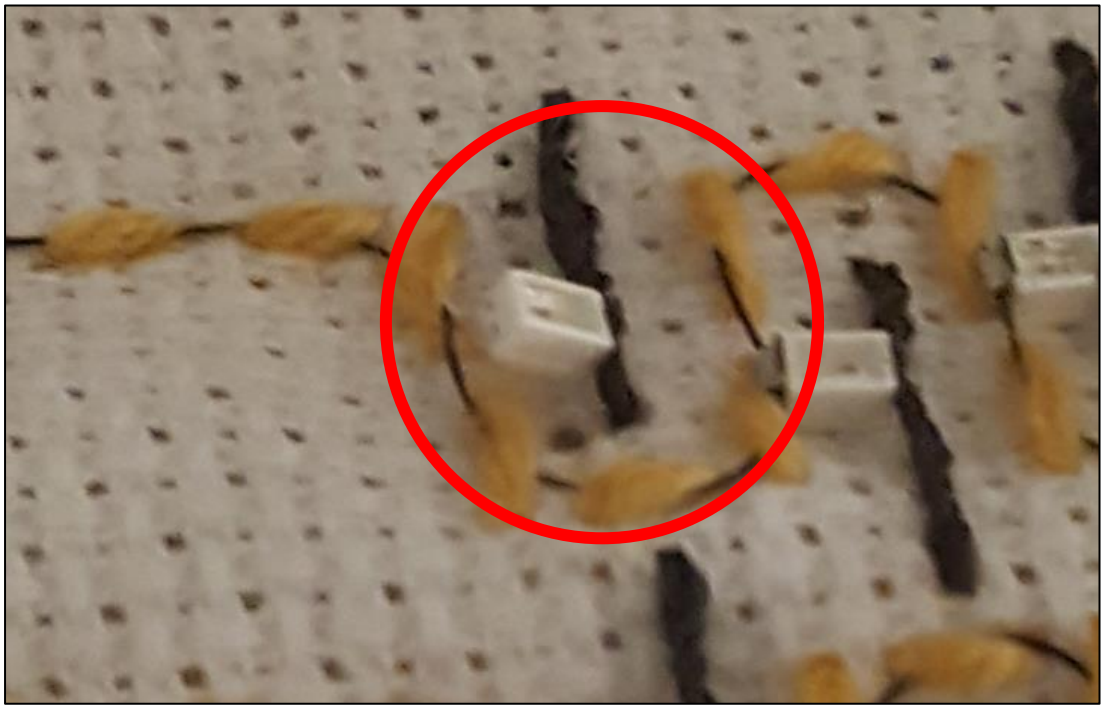

Figure 3 - LED with damaged/missing clip leg requiring replacement (circled in red).

3.2.3.2. CIRCUIT CONSTRUCTION

Regarding ICs installation methods used, SN74HC595 Shift Register ICs were surface mount soldered to film circuit boards. These were then subsequently glued to the fabric (see Figure 4).

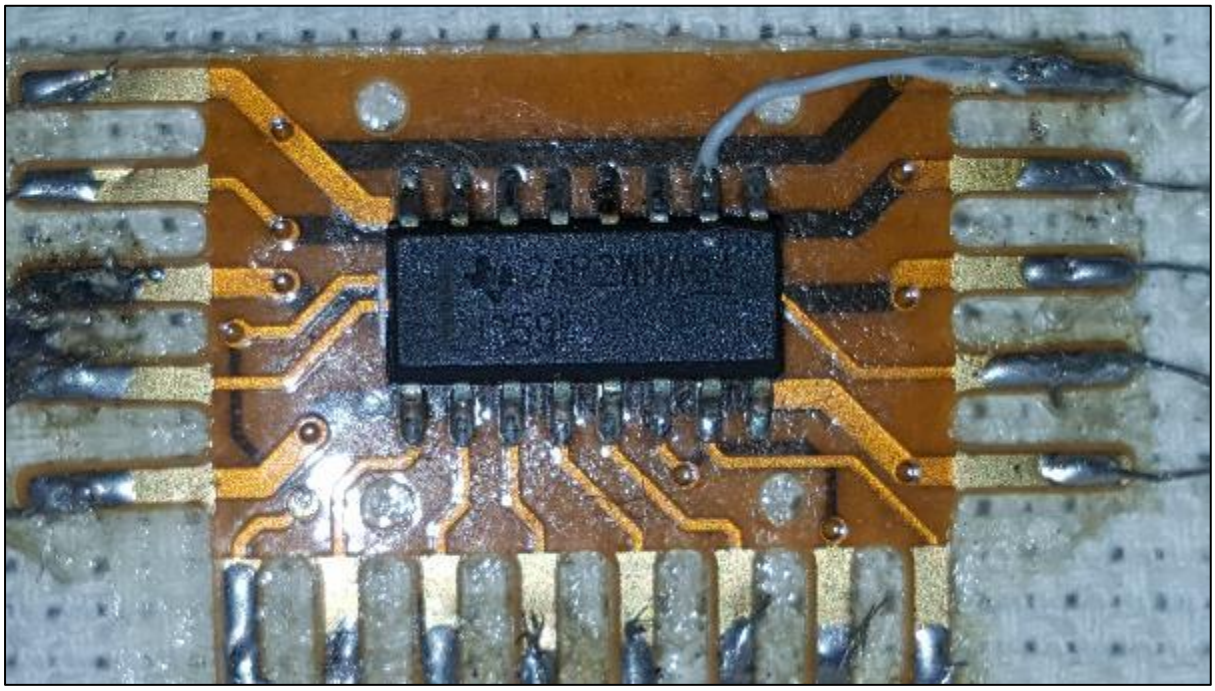

Figure 4 - SN74HC595 Shift Register IC mounted to film circuit board, which is glued to fabric.

ATTiny85 microcontroller ICs were soldered to film circuit board pads with jumper wire extensions (see Figure 5) from the IC legs. However, the ATTiny85 ICs themselves were not adhered to the fabric in any way, posing a risk of damage from mechanical stresses/vibration. Further, because ATTiny85 microcontroller ICs were hand soldered to the jumper leads, the size of the solder joint is typically inconsistent, and large joints (see Figure 5 (right)) risks electrical shorting with adjacent legs.

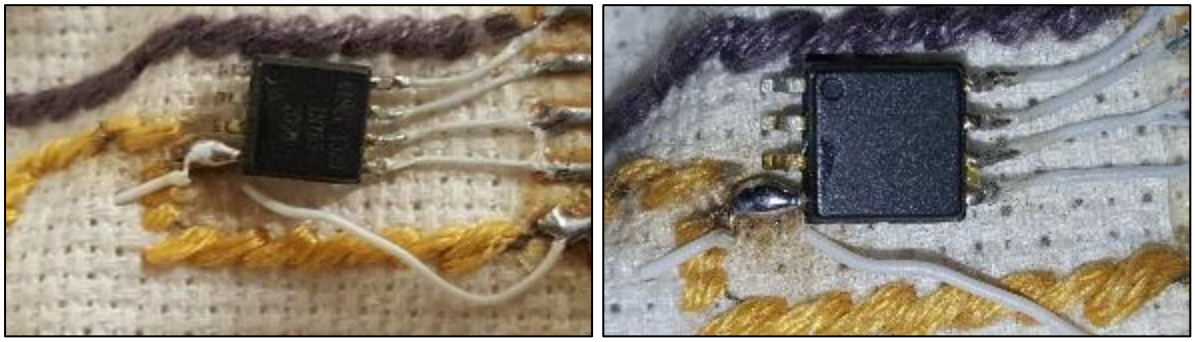

Figure 5 - ATTiny85 microcontrollers connected to SN74HC595 film circuit board using jumper wires to extend legs (left). Large solder joint (right) risks an electrical short to adjacent leg (which should not be electrical connected).

Copper traces/tracks were not used to establish electrical connections between boards (both film or rigid) and LEDs in the circuit. Instead, two types of '*thread wire'* were used to assemble the circuit (see Figure 6):

- **Yellow/Purple thread**: comprised of a non-conductive polymer thread with a thin copper wire inserted through the thread, and
- **Black thread**: comprised of a completely conductive material, which appears to be a braided steel alloy.

Resistance of both yellow/purple thread and black thread was also measured – testing across a length of thread length of approximately 200mm yielded a resistance of approximately:

- **Yellow/purple thread**: 15Ω / ~200mm, and
- **Black thread**: 100Ω/ ~200mm.

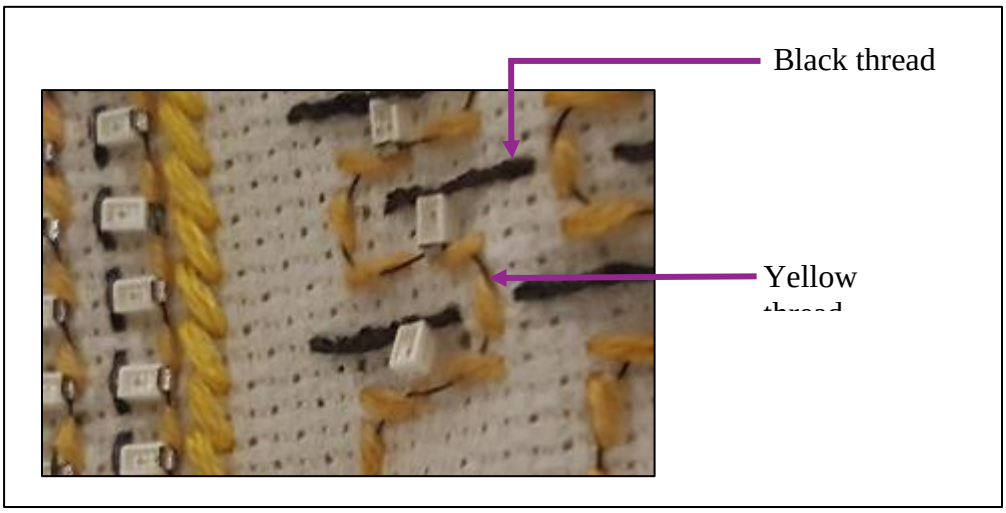

Figure 6 – Types of thread used to connect circuit boards and LEDs. Note the metal thread passing through the yellow thread, but not through the black thread.

These thread wires were used to both connect circuit boards together (see Figure 7), as well as connect circuit boards to LEDs (see Figure 8).

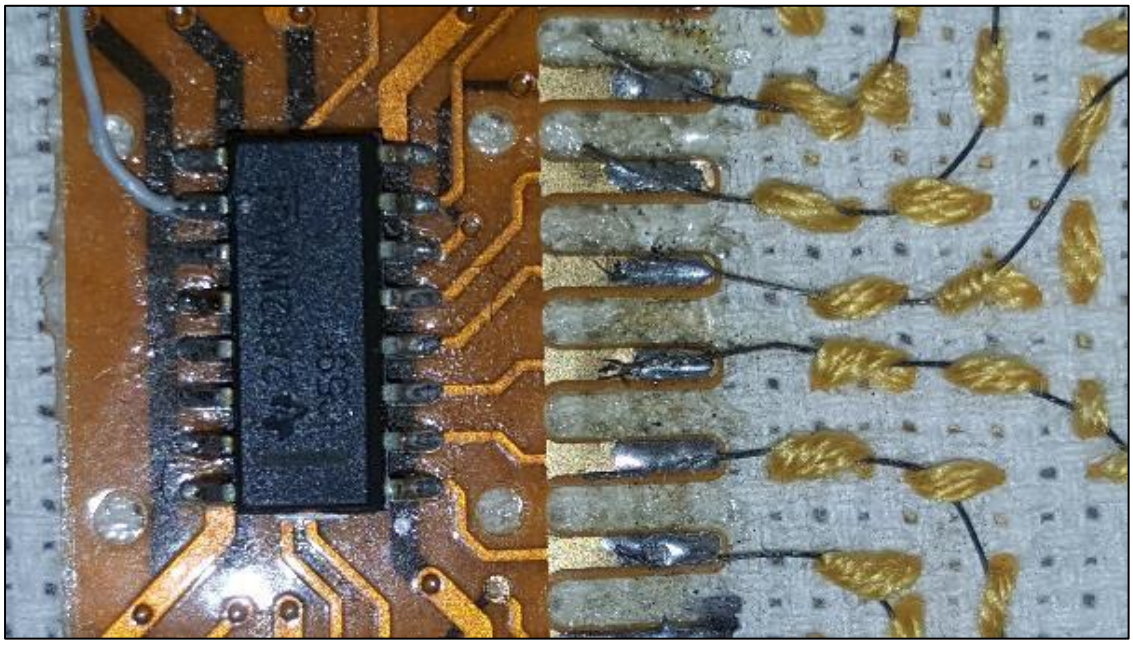

Figure 7 - Connection of thread to film circuit board

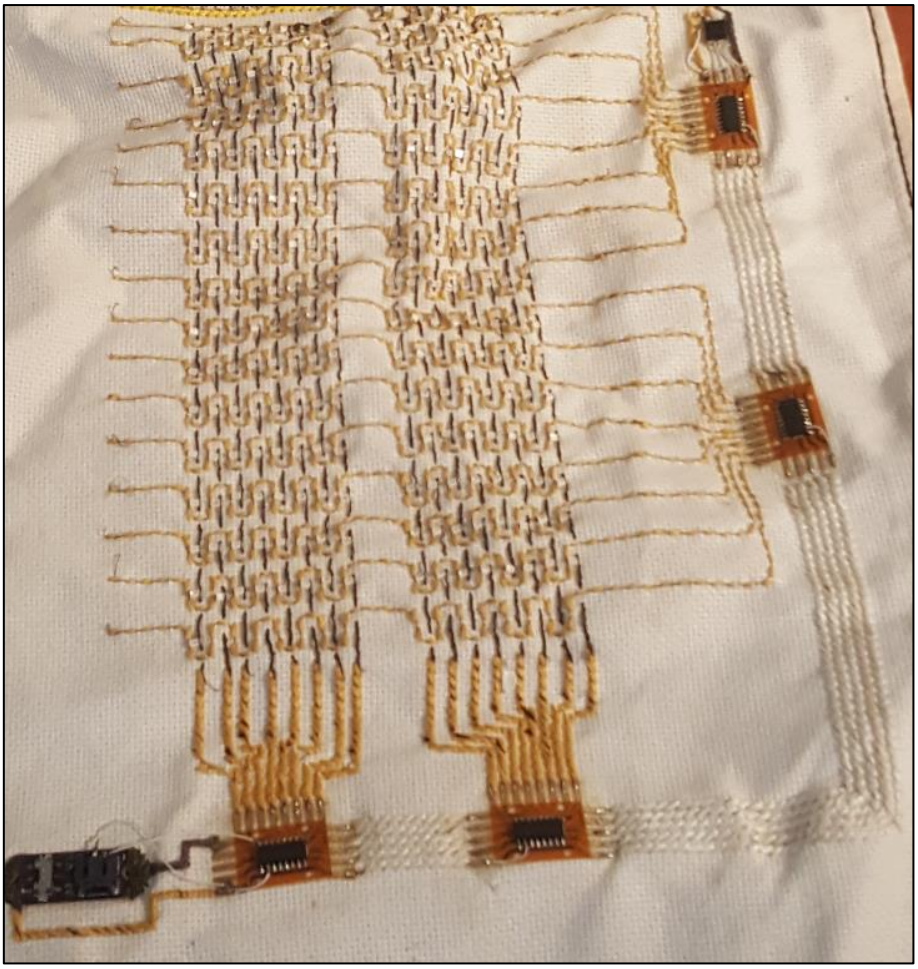

Figure 8 - Thread connections between film circuit boards, rigid circuit board (power supply connector), and LEDs

3.2.4. CONTINUITY TESTING

Due to the number of jumper wires acting as connection redundancies were observed (suggesting discontinuities were previously identified in either the film circuit board or thread wire used), a continuity test was conducted on all connection points in each artefact's circuit.

Continuity tests were conducted with a multimeter on all connection points, including:

- Wire connections between film circuit boards,
- Wire connections between film circuit board and LEDs,
- Wire connections between film circuit board to battery connector PCB,
- Wire connections between film circuit board to ATTiny85 ICs, and
- Board to Board connections through LEDs.

From testing, a number of discontinuity points were identified:

- Discontinuities identified on 2x film circuit boards, and
- A majority were between board to LED (suggesting broken wires), and board-to-board across LEDs (suggesting either breaks in the wires, or disconnection between either/both wires and LED).

No discontinuities were identified on power rails lines or ATTiny85 microcontroller jumper wires.

3.3. OBSERVATION OF CIRCUIT BEHAVIOUR WHEN POWERED

After an initial understanding of the circuit layout and intended behaviour, power was to be supplied to the circuit in order to observe current electronic behaviour in each artefact.

3.3.1. POWERING THE CIRCUIT

The supplied 4.5VDC power supply (using a non-grounded, Type A plug) with the original connector and ~150mm of wire cut and ends stripped, and was advised by the artist to solder this directly to the contacts. Upon inspection, the power supply displayed no Safety Compliance Markings (no Compliance Mark or Testing Certification Identifier, as observed by NSW Fair Trading https://www.fairtrading.nsw.gov.au/buying-products-and-services/product-and-service-safety/electrical-safety/safety-labels-for-electrical-goods). The power supply is non-compliant to Australian Standards, and as such, cannot be used for the showcase as this would violate legislation.

The datasheets for both circuit components (ATMEGA ATTiny85 and TI SN74HC595) were consulted for a suitable operating voltage range:

- ATMEGA ATTiny85:

21. Electrical Characteristics

21.1 Absolute Maximum Ratings*

Operating Temperature	-55°C to +125°C
Storage Temperature	-65°C to +150°C
Voltage on any Pin except $\overline{RESET}$ with respect to Ground	-0.5V to V_{CC}+0.5V
Voltage on $\overline{RESET}$ with respect to Ground	-0.5V to +13.0V
Maximum Operating Voltage	6.0V
DC Current per I/O Pin	40.0 mA
DC Current V_{CC} and GND Pins	200.0 mA

- Texas Instruments SN74HC595:

7.3 Recommended Operating Conditions

over operating free-air temperature range (unless otherwise noted)(1)

			SN54HC595			SN74HC595			UNIT
			MIN	NOM	MAX	MIN	NOM	MAX	
V_{CC}	Supply voltage		2	5	6	2	5	6	V
V_{IH}	High-level input voltage	V_{CC} = 2 V	1.5			1.5			V
		V_{CC} = 4.5 V	3.15			3.15			
		V_{CC} = 6 V	4.2			4.2			
V_{IL}	Low-level input voltage	V_{CC} = 2 V			0.5			0.5	V
		V_{CC} = 4.5 V			1.35			1.35	
		V_{CC} = 6 V			1.8			1.8	
V_I	Input voltage		0		V_{CC}	0		V_{CC}	V
V_O	Output voltage		0		V_{CC}	0		V_{CC}	V
$\Delta t/\Delta v$	Input transition rise or fall time(2)	V_{CC} = 2 V			1000			1000	ns
		V_{CC} = 4.5 V			500			500	
		V_{CC} = 6 V			400			400	
T_A	Operating free-air temperature		–55		125	–40		85	°C

(1) All unused inputs of the device must be held at V_{CC} or GND to ensure proper device operation. See the TI application report, *Implications of Slow or Floating CMOS Inputs*, SCBA004.
(2) If this device is used in the threshold region (from V_{IL}max = 0.5 V to V_{IH} min = 1.5 V), there is a potential to go into the wrong state from induced grounding, causing double clocking. Operating with the inputs at t_t = 1000 ns and V_{CC} = 2 V does not damage the device; however, functionally, the CLK inputs are not ensured while in the shift, count, or toggle operating modes.

Based on the voltage characteristics, a **5V DC Power Supply with USB socket** (Apple phone charger) was used for powering the artefact, and a custom USB Cable (USB Type-A Male with JST 2-Pin 2.0mm header) was assembled for powering the circuit (included with this deliverable to client). This option was selected because the International USB Standard ensures that the supply voltage is always regulated at 5V DC, allowing for international use with any USB power supply (minimum 2A power supply recommended) provided the USB cable with JST connectors is supplied (the phone charger can be locally sourced, or a power bank can be used).

3.3.2. OBSERVED CIRCUIT BEHAVIOUR

Initial observations of circuit behaviour in the main headdress indicated most LEDs were in an off state, with a few dimly-lit, flickering LEDs. This is an undesired behaviour. This behaviour was also exhibited by the remaining artefacts.

Pushing the LEDs down with fingers, pushing the wire on each side of an LED down with plastic clips, or pulling the fabric tort allowed clusters of LEDs to light up. This suggests problems in maintaining electrical connection between the individual LEDs and the thread wire used throughout the circuit, as suggested in the continuity tests conducted in Section 3.2.4.

Current measurement from the pins indicated a current draw of approximately 700mA, which significantly exceeds those rated by the SN74HC595 Shift Register datasheet (20mA). This risks burnout of the output pins on the SN74HC595 Shift Register due to the absence of current limiting resistors.

4. MODIFICATION AND TESTING

4.1. ENSURING ELECTRICAL CONNECTION BETWEEN LED CONTACTS AND THREAD WIRES

From observing with a magnifying glass, there was a clear gap between the LED wing legs/clips and the conductive wire. This is illustrated in Figure 9. This air gap demonstrates that the crimps do not bite down onto the thread, and thus cannot establish nor maintain electrical connection.

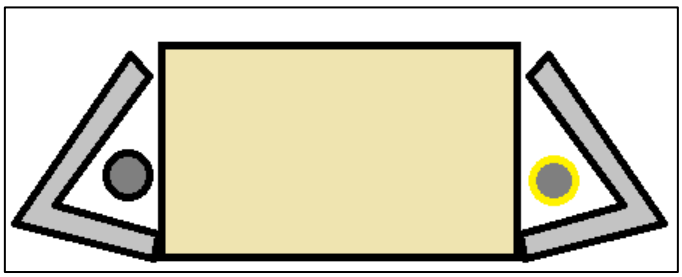

Figure 9 - Illustration of LED with wing legs/clips, and thread wires. Note that the crimps do not 'bite' onto the wire, and because of this, electrical connection is not maintained, resulting with non-illuminating LEDs

An initial option considered for maintaining electrical connection between the LED contacts and thread wires was to fill the LED contact wing crimps with solder. However, this introduces these high lustre, silver beads to the aesthetics of the artwork, and the high heat from soldering risks burning/scorching the yellow thread. The risk to adversely affecting the artefacts' aesthetics was undesirable, and this option was not adopted as a result.

An alternate option was to crimp the legs together to maintain contact by squeezing the contacts into the LED. Doing this makes the LED contacts "bite" into the thread, and this ensures electrical connection with the black/yellow thread wires. However, due to the brittle nature of the LED wing crimps, a small number of these snapped off entirely, rendering these particular LEDs non-functional; these LEDs require replacement.

Once LED legs were crimped for entire sections, scrolling text then began to appear as shown in Figure 10.

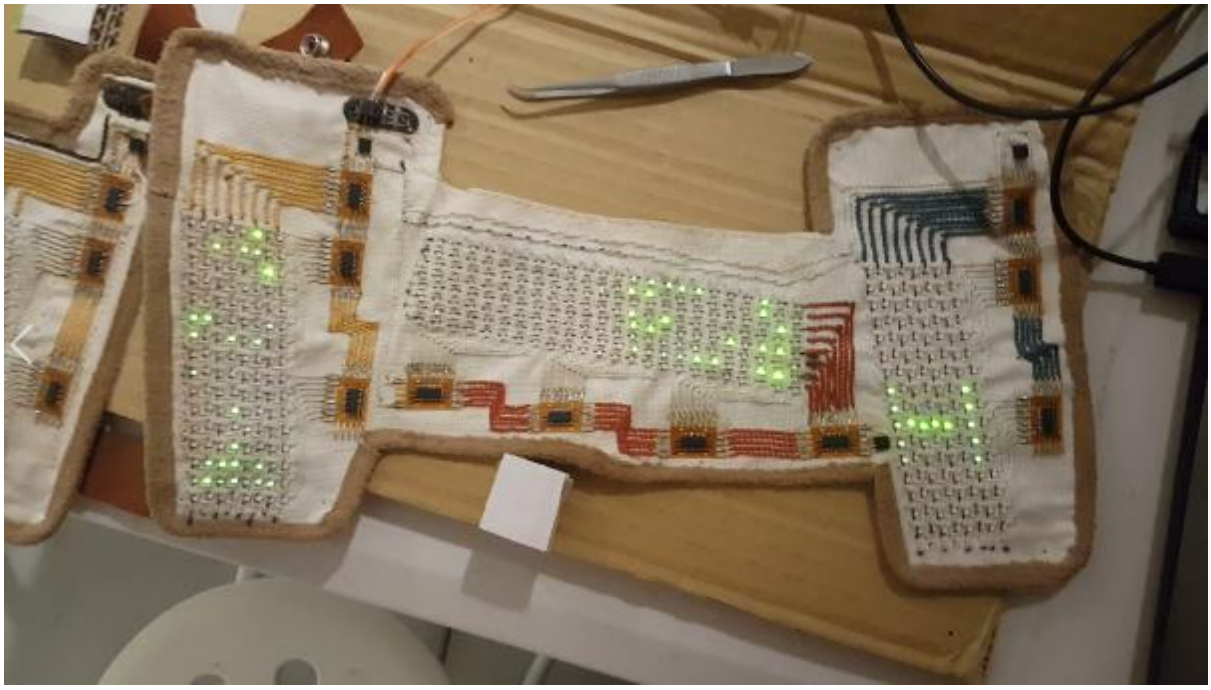

Figure 10 LED sections appeared after crimping the LED wings. This allows the LED to 'bite' onto the conductive thread wires, and establish electrical connection.

4.2. REPAIR OF BROKEN THREAD WIRES

Some rows/columns of LEDs were identified as not illuminating, despite having the LED contacts crimped. We suspected that there were discontinuities in the wire leading from the film circuit board to the LEDs. This would need to be repaired in order to restore electrical continuity.

To address the continuity issues between film circuit boards and LEDs, ~0.01mm aluminium wire was threaded through the existing broken wire (sewing and embedding wire inside existing thread weave to minimize impact on visual aesthetics) until expected LED behaviour was observed. This aluminium wire was obtained from stripping 1m lengths of stranded-core wire, and extracting the individual aluminium strands.

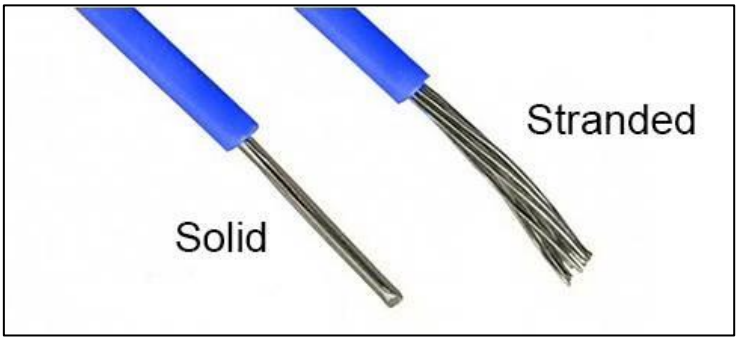

Figure 11 - Solid-core VS. Stranded-core wire (https://www.quora.com/In-home-electrical-wiring-does-stranded-copper-wire-many-wires-inside-the-insulation-have-any-advantage-over-solid-core-single-or-few-hard-wires-inside-the-insulation-wire)

4.3. ADDITION OF DECOUPLING CAPACITORS

Touching the wires between SN74HC595 Shift Register film circuit boards, or the wires on the ATTiny85 microcontroller caused some letters to stop scrolling in sections or entirely. This indicates a corruption of the data-stream from the ATTiny85 microcontroller to the SN74HC595 Shift Register (from electrical noise).

Further, leaving the device operational for a short period of time (~30 seconds) stopped the letter scrolling in some LED display sections. This occurred when a large number of LEDs in that display section were lit. It was suspected that a significant drop in operating voltage of the Shift Register was occurring due to high current draw from powering a large number of LEDs without current limitation. This was confirmed with a multimeter, where drops in supply voltage of 0.7V were observed between the VCC and GND pins on the SN74HC595 Shift Register IC once a large number of LEDs were lit.

In both cases, scrolling text was only restored when the artefact was unplugged and subsequently re-powered, which was undesirable in a gallery showcase setting.

To compensate for the noise and IC supply voltage fluctuation sensitivity, decoupling capacitors (10µF electrolytic, connected between VCC and GND) were added to each ATTiny85 microcontroller IC, and at each battery connection point.

The electrolytic capacitors were installed from behind the artefacts, with the capacitor legs threaded through the fabric as closely to the component as possible, and soldered to minimize visibility and impact on the aesthetics of the artefacts. The legs were insulated with cellophane tape.

Once decoupling capacitors were installed, fidelity of the text was observed, even after touching the wires between Shift Register ICs and continuous use over a period of 15 minutes.

4.4. PROBLEM ATTINY85 MICROCONTROLLER ON WINGED HEADDRESS ARTEFACT

On one section of LEDs on one of the wings, the entire section was found to be continuously flickering at a high frequency (identified once LED wings were crimped and LED functionality was restored). We suspected that there was corruption in the ATTiny85 microcontroller, which controls this section of LEDs.

Due to the short time-frame, and not having the available source code, flashing equipment and a spare ATTiny85 IC at the time of repair, we were unable to perform the repair on this section of the artefact. We have left this as a recommendation for future repair.

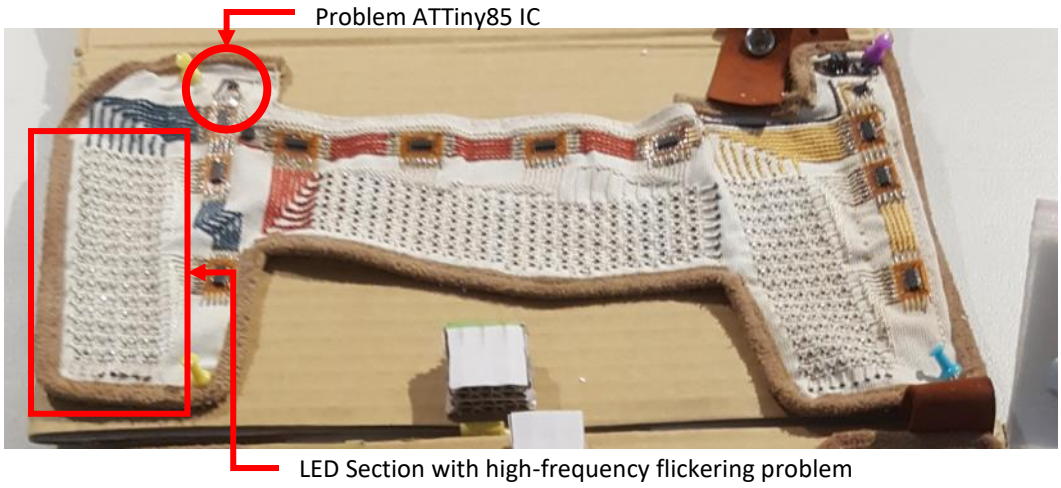

Figure 12 - LED Section with high-frequency flickering problem, suspected to be due to a corrupted/damaged ATTiny85 microcontroller

4.5. PROBLEM FILM CIRCUIT BOARD ON HEADDRESS SIDE ARTEFACT (4.4)

On the same artefact in Section 4.4, an electrical discontinuity was identified on one of the film circuit boards. This film circuit board (highlighted in Figure 13) has discontinuity between the mounted SN74HC595 Shift Register IC pin and film circuit board pad (highlighted in Figure 14). This particular pad is required for passing communications to the next SN74HC595 Shift Register IC in the chain, and affects the LED cluster (highlighted in Figure 13) by preventing text scrolling in the LED cluster (because no new communication can be sent to the SN74HC595 Shift Register IC controlling the LED cluster).

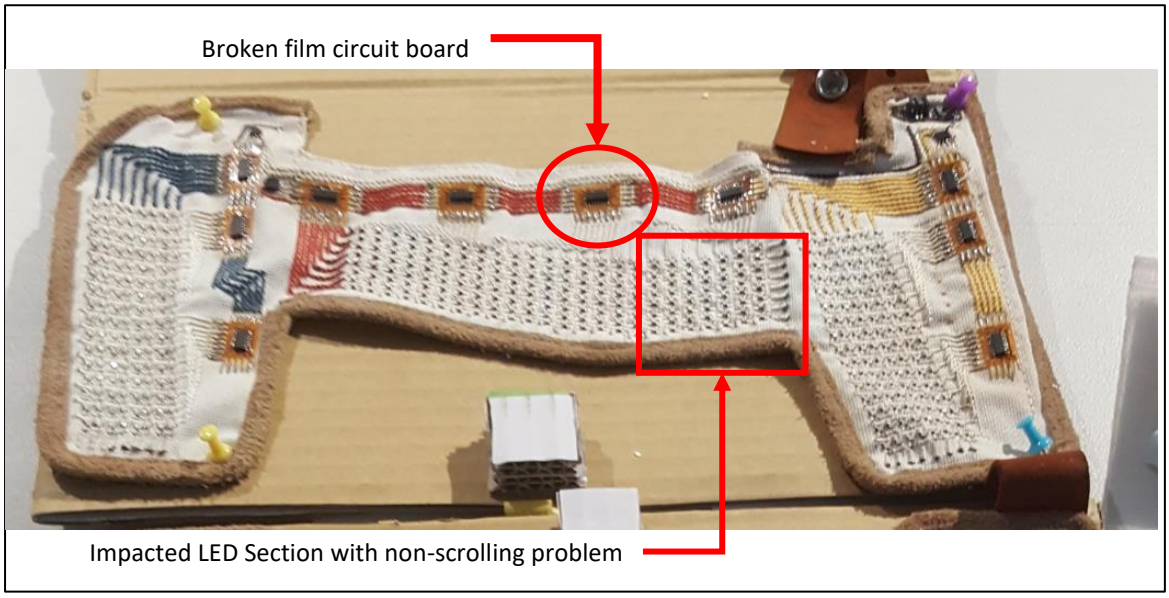

Figure 13 - Location and affected LED section from broken film circuit board.

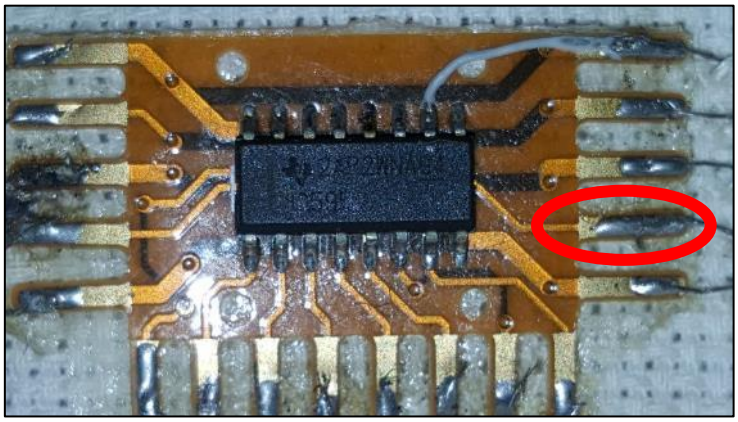

Figure 14 - pin affected by broken film circuit board, caused by either a broken IC pad, trace, or board via.

Due to the hardware issues of the artefact, we advised that this particular wing cannot be functional during showcase. The other wing (with restored functionality) could be presented powered for short periods, and continuous operation was not advised due to the absence of current limitation, and this posed a risk to overstressing the SN74HC595 Shift Register ICs.

5. RECOMMENDATIONS

5.1. USE MEASURES TO CRIMP OR MAINTAIN CONTACT BETWEEN LEDS AND THREAD WIRE

Based on the observations and repairs performed, the poor connection between the LEDs and thread wire is the primary cause of the lack of LED illumination in each artefact. A more robust method is required during assembly to ensure LEDs maintain electrical contact with thread wires.

Available options include:

- Crimping LED contacts to 'bite' onto the thread wire – this mechanically ensures electrical connectivity, but there is a risk of snapping the LED contacts in the process,
- Applying solder, or some form of conductive adhesive, between LED contacts and thread wires – this fills any gaps, but risks affecting the appearance of the artefacts,
- Tying the thread wire around each LED contact tightly to ensure connection – given the large number of LEDs, this approach is laborious, and mechanical vibration or changes in the environment can cause the thread wire loops around the LED contacts to loosen over time.
- Selection of an alternative model of LED which accommodates for any of the above points.

5.2. REPLACE/REFLASH BROKEN ATMEGA ATTINY85

In order to restore scrolling text in the LED section highlighted in Section 4.4, the ATTiny85 microcontroller IC needs to be re-flashed, or replaced and re-flashed with source code.

5.3. REPLACE BROKEN FILM CIRCUIT BOARD

In order to restore scrolling text in the LED section highlighted in Section 0, the film circuit board for the particular IC needs to be replaced.

5.4. ADDING CIRCUIT PROTECTION MEASURES

It is highly recommended that both decoupling capacitors, and current limiting resistors are added into the circuit.

5.4.1. DECOUPLING CAPACITORS

Decoupling capacitors help maintain fidelity of the digital circuit's logic operations by improving the circuit's resilience to voltage fluctuations; caused by either voltage dips from driving a large number of LEDs with a particular Shift Register, or electrical noise introduced from the operating environment (including electrical wires and skin).

Ideally all ICs (both the ATTiny85 and SN74HC595) should each have a decoupling capacitor placed on each IC, as close to the IC's VCC and GND pins as possible. However, at least 1x 10µF should be added to the power rails (5V and GND lines) for every 5 ICs.

5.4.2. CURRENT LIMITING RESISTORS

Current limiting resistors help ensure longevity of the operation of the device by preventing burn out of IC pins (from current overdraw) and reduces stress on the IC. Based on calculations, at an operating voltage of 5V DC, it is advised that current limiting resistors of at least 100 Ω should be added to each output pad of the film circuit board connected to the LEDs' cathodes (resistance from conductive thread wires was considered in the calculation, see next page for calculations).

This can be achieved with individual resistors, or a resistor network (similar to the Vishay SMD CRA04S-BC, 8P/4R, 100R +- 1%).

Current Limiting Resistor Calculations

From SN74HC595 Shift Register IC Datasheet:

7.1 Absolute Maximum Ratings

over operating free-air temperature range (unless otherwise noted)[1]

			MIN	MAX	UNIT
V_{CC}	Supply voltage		–0.5	7	V
I_{IK}	Input clamp current[2]	$V_I < 0$ or $V_I > V_{CC}$		±20	mA
I_{OK}	Output clamp current [2]	$V_O < 0$ or $V_O > V_{CC}$		±20	mA
I_O	Continuous output current	$V_O = 0$ to V_{CC}		±35	mA
	Continuous current through V_{CC} or GND			±70	mA
T_J	Junction temperature			150	°C
T_{stg}	Storage temperature		–65	150	°C

For worst case:

Rated maximum current draw for IC: 20mA

Operating/output voltage: 5V

Minimum total in-line resistance: 5/0.020 = 250Ω (Ohm's Law)

Assuming thread wire resistance ~50 Ω

Minimum required resistor value: 200 Ω (Using standard resistor values)

It should also be noted that the SN74HC595 datasheet recommends 560 Ω per LED with VCC = 5V DC:

10.2 Typical Application

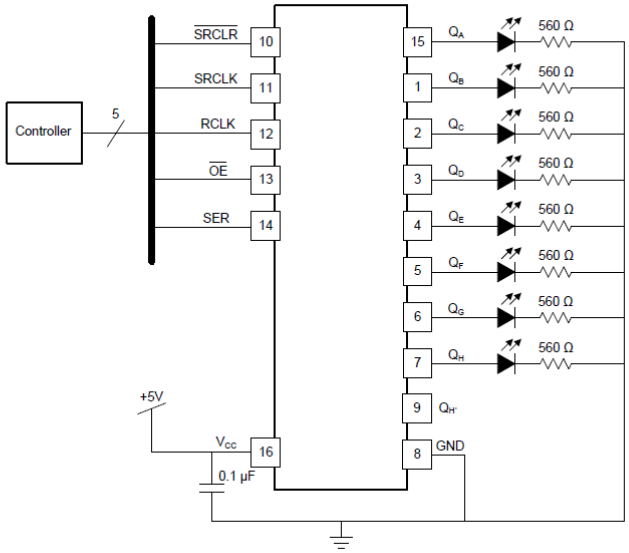

Figure 5. Typical Application Schematic

Figure 15 - Recommended LED Schematic from SN74HC595 Datasheet. Note current limiting 560 Ω resistors on output lines.